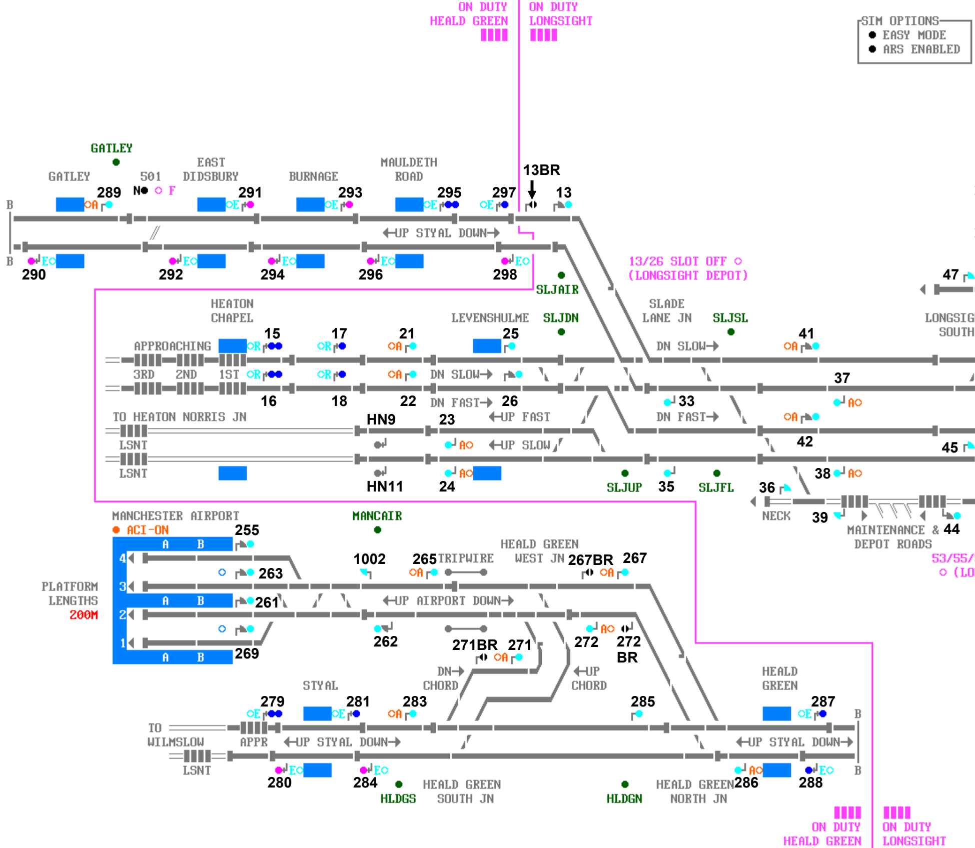
SIM OPTIONS
● EASY MODE
● ARS ENABLED
ON DUTY
HEALD GREEN
ON DUTY
LONGSIGHT
GATLEY
GATLEY
501
N●
○ F
EAST
DIDSBURY
BURNAGE
MAULDETH
ROAD
13BR
289
291
293
295
297
13
B
B
←UP STYAL DOWN→
290
292
294
296
298
13/26 SLOT OFF ○
(LONGSIGHT DEPOT)
SLJAIR
47
HEATON
CHAPEL
LEVENSHULME
SLJDN
SLADE
LANE JN
SLJSL
LONGSIG
SOUTH
APPROACHING
15
17
21
25
41
DN SLOW→
3RD
2ND
1ST
DN SLOW→
37
16
18
22
DN FAST→
26
33
TO HEATON NORRIS JN
HN9
23
←UP FAST
DN FAST→
LSNT
←UP SLOW
42
45
LSNT
HN11
24
SLJUP
35
SLJFL
36
38
NECK
39
MAINTENANCE &
DEPOT ROADS
44
53/55/
○ (LO
MANCHESTER AIRPORT
● ACI-ON
255
MANCAIR
1002
265
TRIPWIRE
HEALD GREEN
WEST JN
267BR
267
4
3
2
1
A
B
A
B
A
B
263
261
PLATFORM
LENGTHS
200M
←UP AIRPORT DOWN→
262
271BR
271
272
272
BR
269
DN→
CHORD
←UP
CHORD
HEALD
GREEN
STYAL
279
281
283
285
287
TO
WILMSLOW
APPR
←UP STYAL DOWN→
←UP STYAL DOWN→
B
B
LSNT
280
284
HLDGS
HEALD GREEN
SOUTH JN
HLDGN
HEALD GREEN
NORTH JN
286
288
ON DUTY
HEALD GREEN
ON DUTY
LONGSIGHT

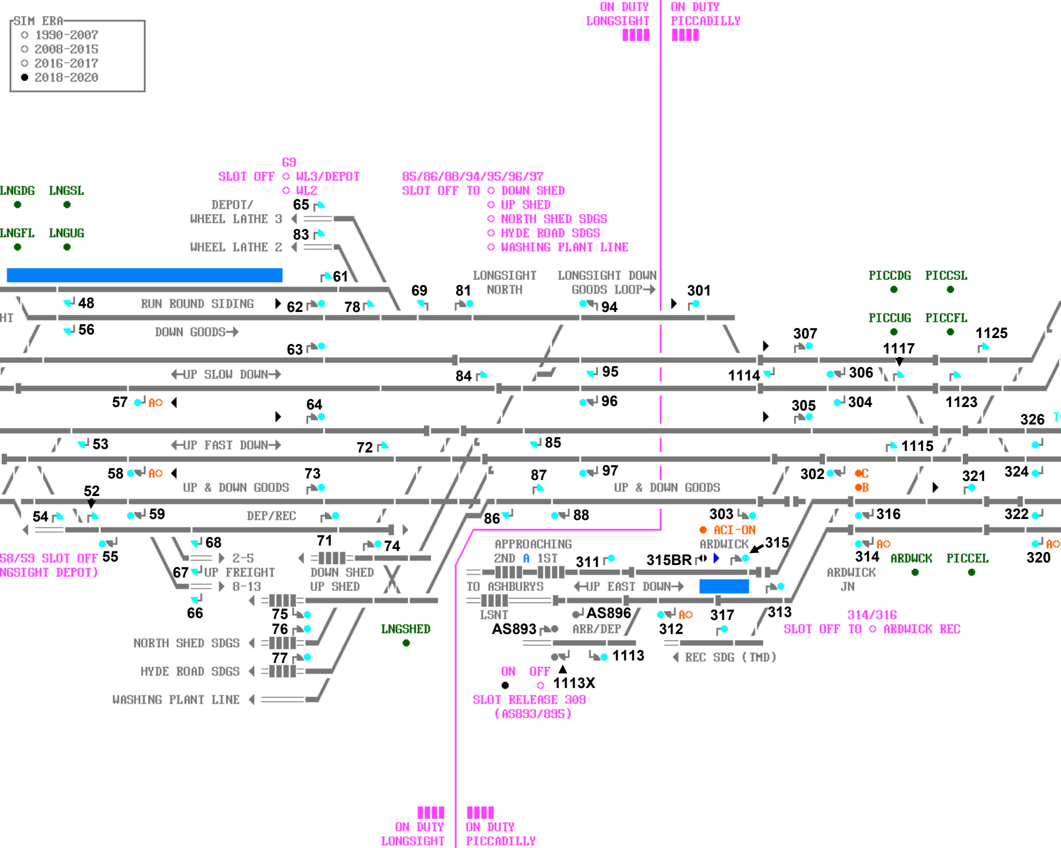
SIM ERA
○ 1990-2007
○ 2008-2015
○ 2016-2017
● 2018-2020
ON DUTY LONGSIGHT
ON DUTY PICCADILLY
69
SLOT OFF ○ WL3/DEPOT
○ WL2
85/86/88/94/95/96/97
SLOT OFF TO ○ DOWN SHED
○ UP SHED
○ NORTH SHED SDGS
○ HYDE ROAD SDGS
○ WASHING PLANT LINE
LNGDG
LNGSL
LNGFL
LNGUG
DEPOT/
WHEEL LATHE 3
65
83
WHEEL LATHE 2
61
69
81
LONGSIGHT NORTH
LONGSIGHT DOWN GOODS LOOP
301
94
PICCDG
PICCSL
PICCUG
PICCFL
1125
307
1117
HT
48
RUN ROUND SIDING
62
78
56
DOWN GOODS
63
UP SLOW DOWN
84
95
1114
306
57
AO
64
96
305
304
1123
326
T
53
UP FAST DOWN
72
85
1115
58
AO
73
UP & DOWN GOODS
87
97
UP & DOWN GOODS
302
C
B
321
324
52
54
59
DEP/REC
86
88
303
ACI-ON
316
322
55
68
71
74
APPROACHING
2ND A 1ST
ARDWICK
315
314
AO
320
AO
58/59 SLOT OFF
NGSIGHT DEPOT)
2-5
DOWN SHED
311
315BR
ARDWCK
PICCEL
67
UP FREIGHT
UP SHED
8-13
TO ASHBURYS
UP EAST DOWN
ARDWICK JN
66
75
LSNT
AS896
AO
317
313
314/316
SLOT OFF TO ○ ARDWICK REC
76
LNGSHED
AS893
ARR/DEP
312
NORTH SHED SDGS
77
1113
REC SDG (TMD)
HYDE ROAD SDGS
ON
OFF
1113X
SLOT RELEASE 309
(AS893/895)
WASHING PLANT LINE
ON DUTY LONGSIGHT
ON DUTY PICCADILLY

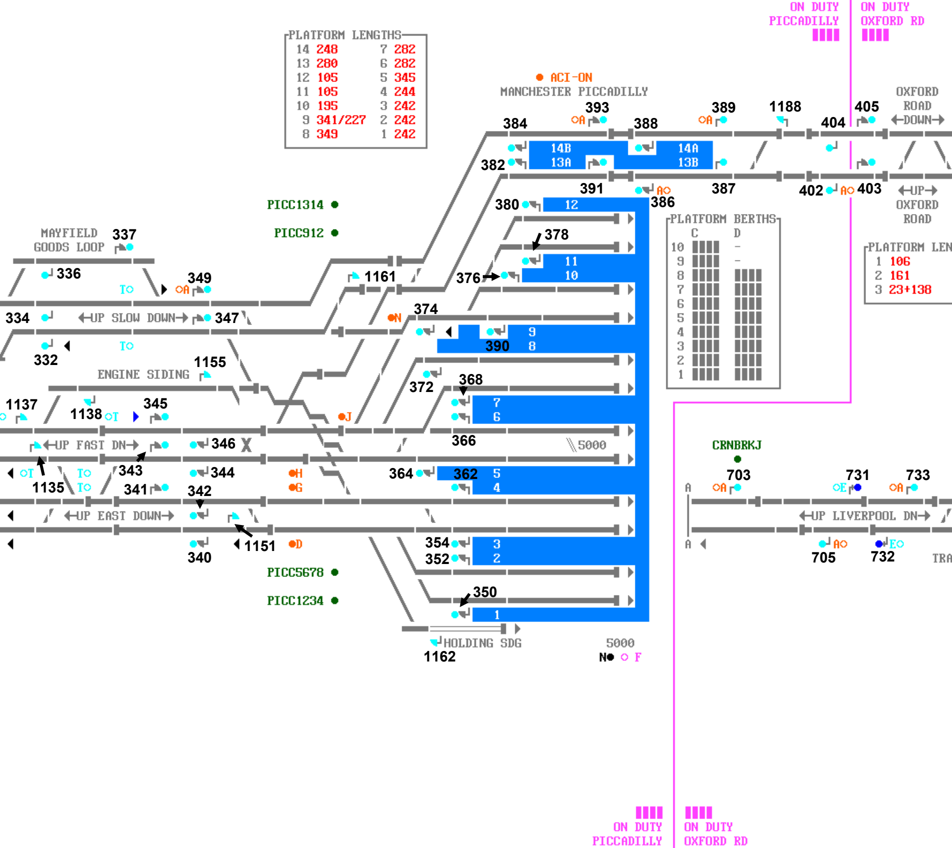

PLATFORM LENGTHS

14	248	7	282
13	280	6	282
12	105	5	345
11	105	4	244
10	195	3	242
9	341/227	2	242
8	349	1	242

PLATFORM LEN

1	106
2	161
3	23+138

ON DUTY PICCADILLY
ON DUTY OXFORD RD
ACI-ON
MANCHESTER PICCADILLY
OXFORD ROAD ←DOWN→
←UP→ OXFORD ROAD
393
384
388
389
1188
404
405
382
391
387
402
403
386
380
14B
13A
14A
13B
12
11
10
9
8
7
6
5
4
3
2
1
PICC1314
PICC912
PLATFORM BERTHS
C
D
10
9
8
7
6
5
4
3
2
1
MAYFIELD GOODS LOOP
337
336
349
378
376
1161
334
←UP SLOW DOWN→
347
374
332
390
1155
ENGINE SIDING
372
368
1137
1138
345
366
←UP FAST DN→
346
5000
CRNBRKJ
703
731
733
343
344
364
362
1135
341
342
←UP EAST DOWN→
←UP LIVERPOOL DN→
705
732
TRA
340
1151
354
352
PICC5678
PICC1234
350
HOLDING SDG
1162
5000
N
F
A
D
E
G
H
J
N
T
ON DUTY PICCADILLY
ON DUTY OXFORD RD

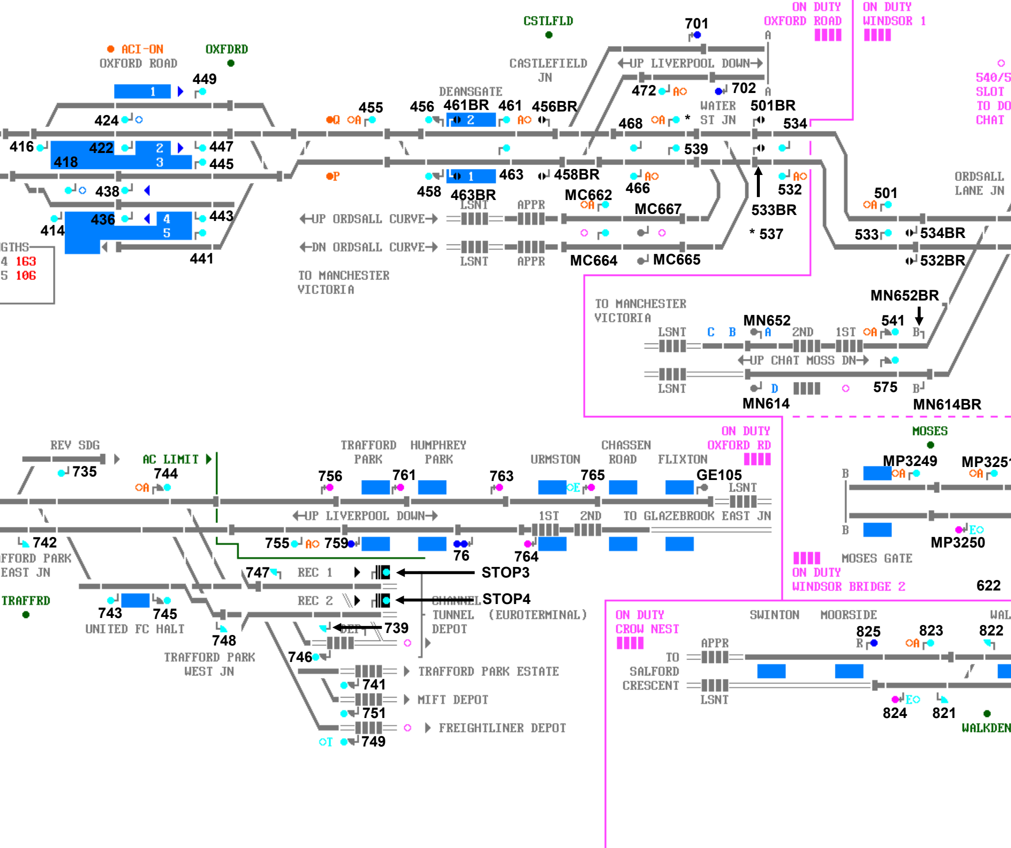
CSTLFLD
701
ON DUTY
OXFORD ROAD
ON DUTY
WINDSOR 1
ACI-ON
OXFORD ROAD
OXFDRD
CASTLEFIELD
JN
UP LIVERPOOL DOWN
540/5
SLOT
TO DO
CHAT
449
472
702
DEANSGATE
WATER
ST JN
455
456
461BR
461
456BR
501BR
424
468
534
416
422
447
418
445
539
458
463
458BR
MC662
466
438
463BR
LSNT
APPR
532
MC667
533BR
501
ORDSALL
LANE JN
436
443
UP ORDSALL CURVE
414
533
534BR
* 537
GTHS
4 163
5 106
DN ORDSALL CURVE
LSNT
APPR
MC664
MC665
532BR
441
TO MANCHESTER
VICTORIA
TO MANCHESTER
VICTORIA
MN652BR
MN652
541
LSNT
C
B
A
2ND
1ST
UP CHAT MOSS DN
LSNT
D
575
MN614
MN614BR
ON DUTY
OXFORD RD
MOSES
REV SDG
AC LIMIT
TRAFFORD
PARK
HUMPHREY
PARK
URMSTON
CHASSEN
ROAD
FLIXTON
735
744
756
761
763
765
GE105
LSNT
MP3249
MP3251
UP LIVERPOOL DOWN
1ST
2ND
TO GLAZEBROOK EAST JN
742
755
759
76
764
MP3250
FFORD PARK
EAST JN
747
REC 1
STOP3
MOSES GATE
ON DUTY
WINDSOR BRIDGE 2
622
TRAFFRD
743
745
REC 2
STOP4
CHANNEL
TUNNEL (EUROTERMINAL)
DEPOT
UNITED FC HALT
748
739
ON DUTY
CROW NEST
SWINTON
MOORSIDE
WAL
825
823
822
TRAFFORD PARK
WEST JN
746
APPR
TO
SALFORD
CRESCENT
TRAFFORD PARK ESTATE
741
MIFT DEPOT
LSNT
824
821
751
WALKDEN
FREIGHTLINER DEPOT
749

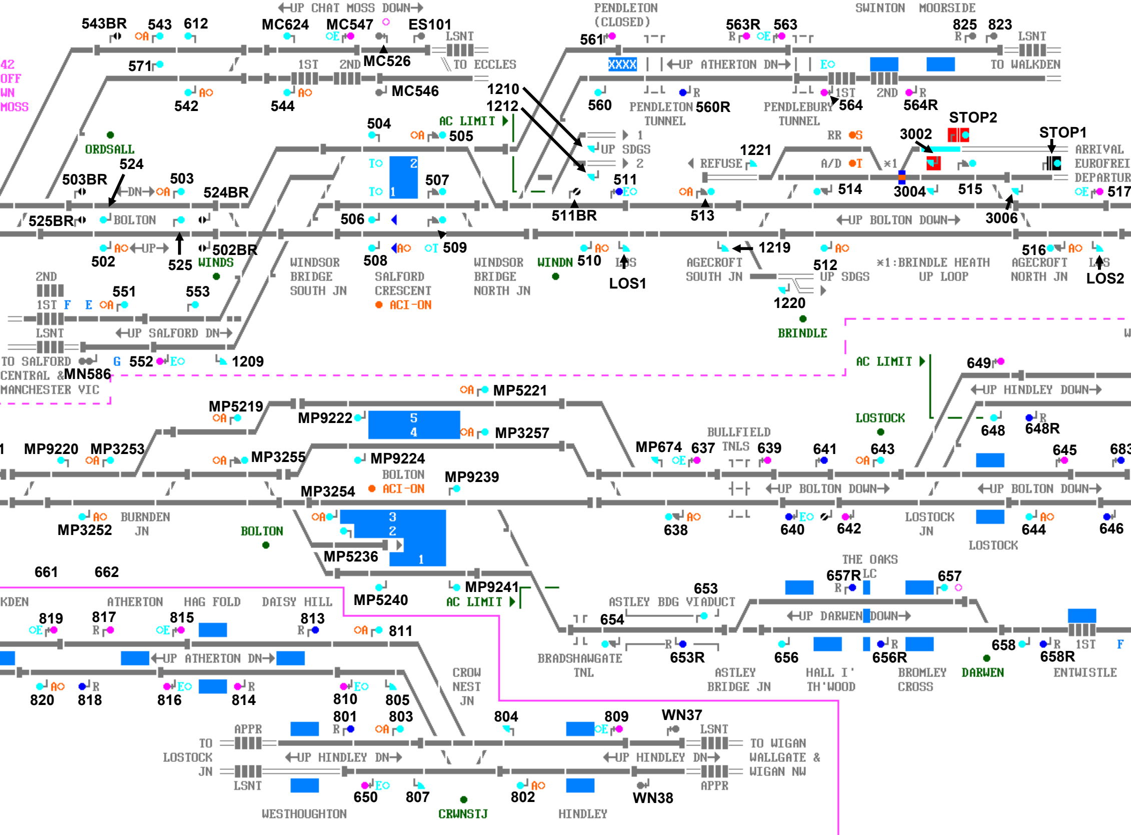

←UP CHAT MOSS DOWN→
543BR
543
612
MC624
MC547
ES101
LSNT
MC526
PENDLETON (CLOSED)
561
563R
563
SWINTON
MOORSIDE
825
823
LSNT
42
OFF
WN
MOSS
571
1ST
2ND
TO ECCLES
XXXX
←UP ATHERTON DN→
TO WALKDEN
542
544
MC546
1210
1212
560
PENDLETON TUNNEL
560R
PENDLEBURY TUNNEL
1ST
2ND
564
564R
STOP2
504
AC LIMIT
505
1
UP SDGS
2
RR
S
3002
STOP1
ORDSALL
524
REFUSE
1221
A/D
T
×1
ARRIVAL
EUROFREI
DEPARTUR
503BR
503
524BR
TO
2
TO
1
507
511
513
514
3004
515
517
←DN→
BOLTON
525BR
506
511BR
3006
←UP BOLTON DOWN→
502
←UP→
502BR
525
WINDS
508
509
510
1219
512
516
LOS1
LOS2
WINDSOR BRIDGE SOUTH JN
SALFORD CRESCENT
ACI-ON
WINDSOR BRIDGE NORTH JN
WINDN
AGECROFT SOUTH JN
UP SDGS
×1:BRINDLE HEATH UP LOOP
AGECROFT NORTH JN
2ND
1ST
F
E
551
553
1220
BRINDLE
LSNT
←UP SALFORD DN→
TO SALFORD CENTRAL & MANCHESTER VIC
MN586
G
552
1209
AC LIMIT
649
MP5221
MP5219
MP9222
5
4
MP3257
←UP HINDLEY DOWN→
LOSTOCK
648
648R
MP9220
MP3253
MP3255
MP9224
BULLFIELD TNLS
MP674
637
639
641
643
645
683
BOLTON
ACI-ON
MP9239
MP3254
←UP BOLTON DOWN→
←UP BOLTON DOWN→
MP3252
BURNDEN JN
BOLTON
3
2
1
638
640
642
LOSTOCK JN
644
646
LOSTOCK
MP5236
THE OAKS
657R
LC
657
661
662
MP9241
AC LIMIT
MP5240
653
ASTLEY BDG VIADUCT
654
←UP DARWEN DOWN→
KDEN
ATHERTON
HAG FOLD
DAISY HILL
819
817
815
813
811
←UP ATHERTON DN→
BRADSHAWGATE TNL
653R
656
656R
658
658R
1ST
F
ASTLEY BRIDGE JN
HALL I' TH'WOOD
BROMLEY CROSS
DARWEN
ENTWISTLE
820
818
816
814
810
805
CROW NEST JN
801
803
804
809
WN37
APPR
LSNT
TO LOSTOCK JN
←UP HINDLEY DN→
←UP HINDLEY DN→
TO WIGAN WALLGATE & WIGAN NW
LSNT
650
807
802
WN38
APPR
WESTHOUGHTON
CRWNSTJ
HINDLEY

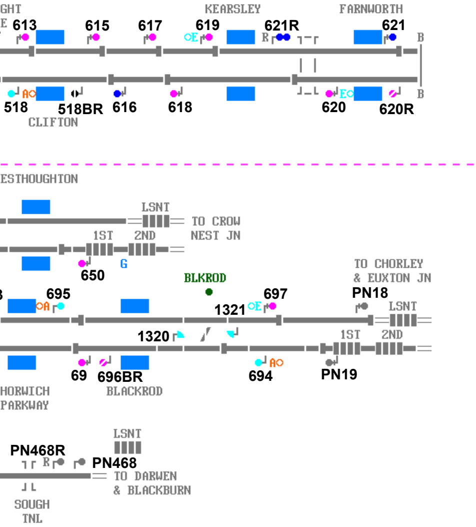
GHT
E
613
615
617
619
KEARSLEY
621R
FARNWORTH
621
B
518
518BR
616
618
620
620R
B
CLIFTON
ESTHOUGHTON
LSNT
TO CROW
NEST JN
1ST
2ND
650
G
BLKROD
TO CHORLEY
& EUXTON JN
695
697
PN18
1321
LSNT
1320
1ST
2ND
69
696BR
694
PN19
HORWICH
PARKWAY
BLACKROD
LSNT
PN468R
PN468
TO DARWEN
& BLACKBURN
SOUGH
TNL